WESTGATE

THE FUTURE IS HERE... AND IT'S QUITE BRIGHT!

- Product should be installed and serviced by a certified electrician in accordance with applicable national, state, and local building and electrical codes.
- To reduce the risk of electric shock, ensure that the main power source and circuit breakers are switched off before performing any installation or wiring procedures.
- Ensure all mounts and fasteners are securely installed. Failure to properly install fixture may result in damage or injury, for which the manufacturer does not assume responsibility
- Check product label for specific electrical specifications related to installation.
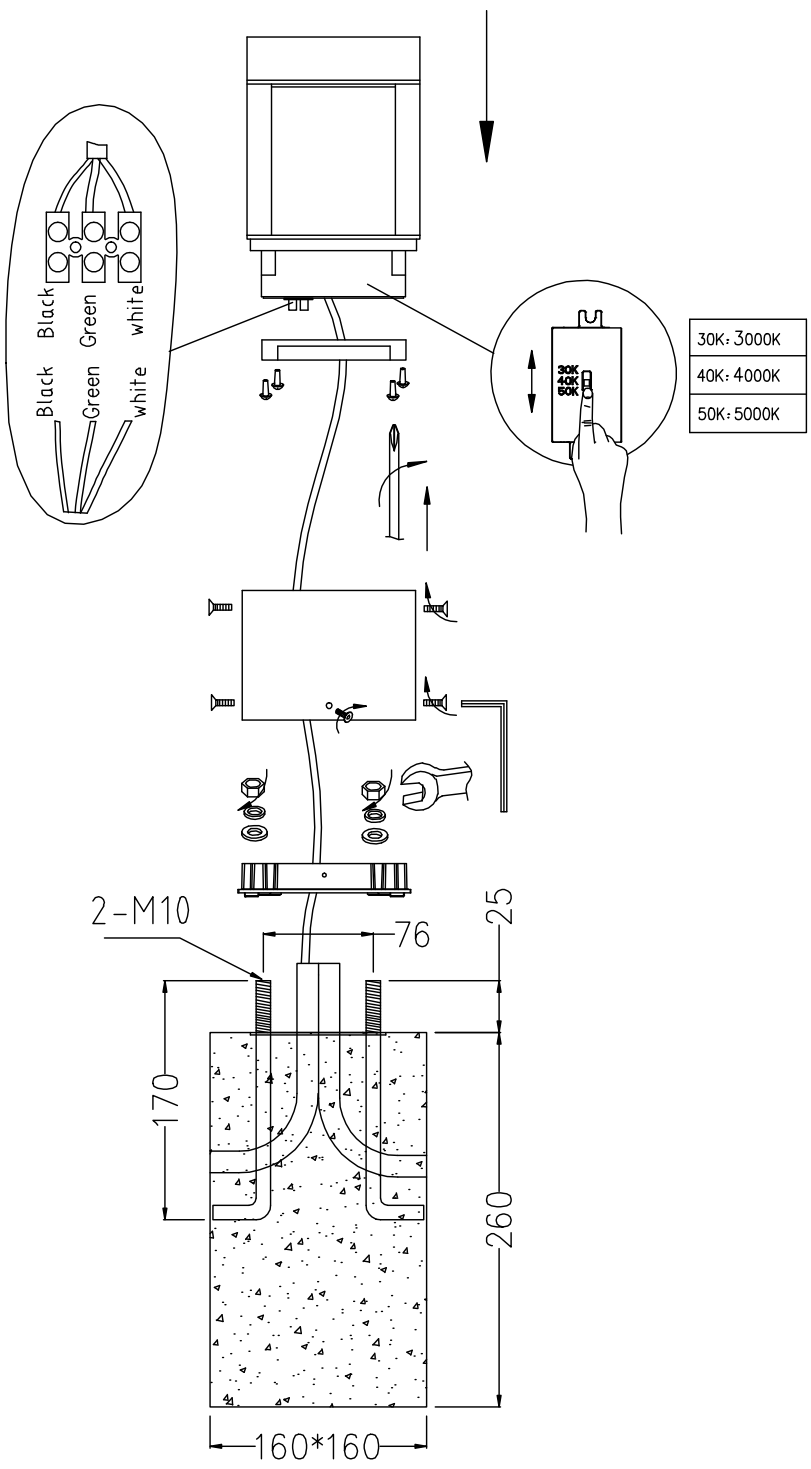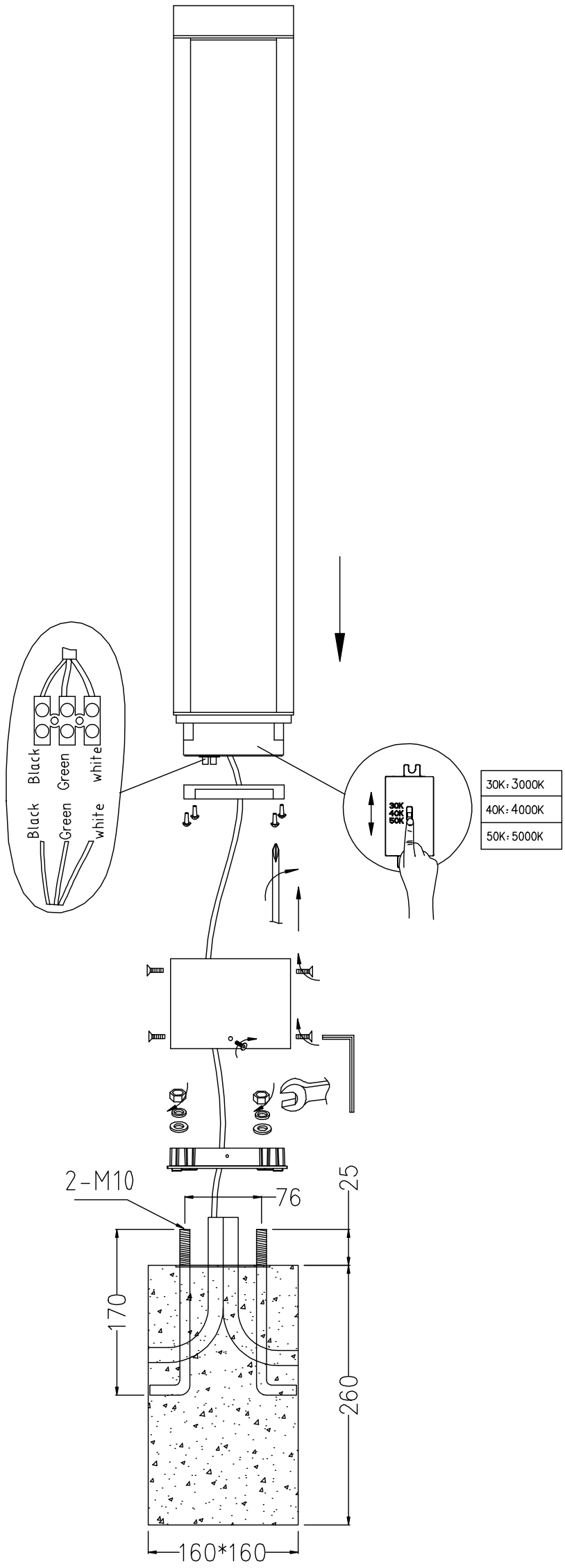
Improper installation will void warranty.